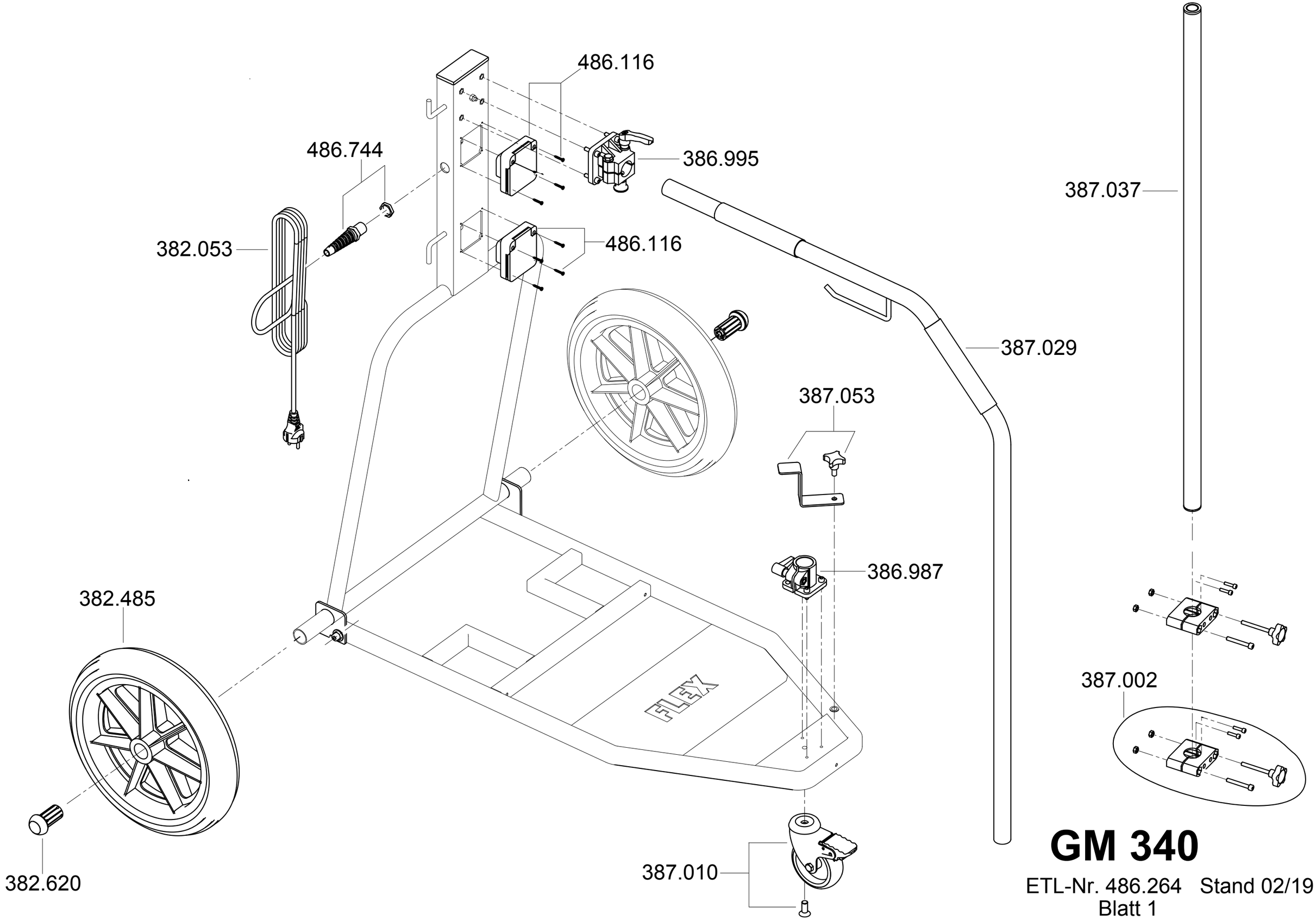

GM 340

ETL-Nr. 486.264 Stand 02/19
Blatt 1

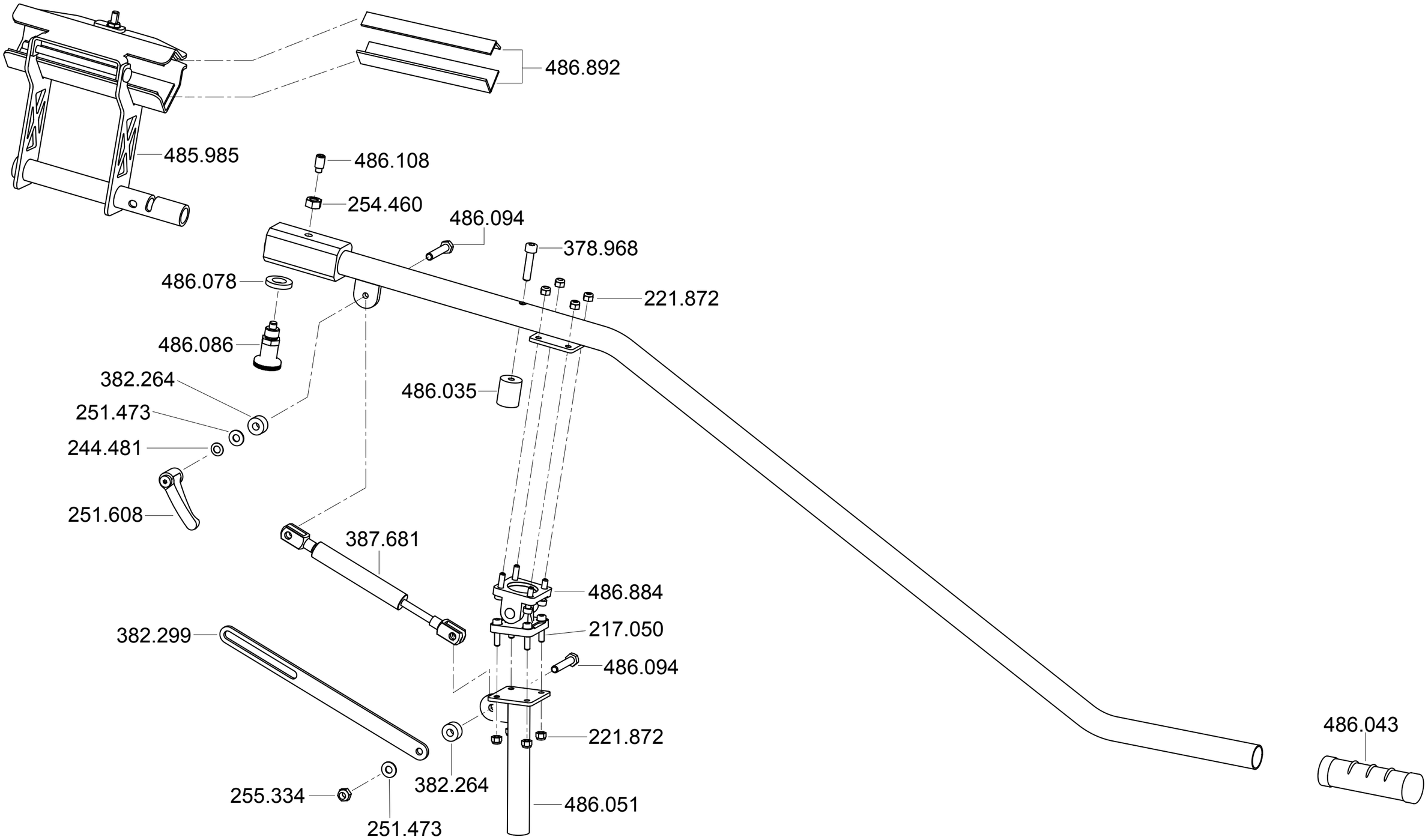

GM 340

ETL-Nr. 486.264 Stand 02/19
Blatt 2